Dimensional stability of contemporary irreversible hydrocolloids: Humidor versus wet tissue storage

Christina Erbe, DMD,[a] Sabine Ruf, DMD,[b] Bernd Wöstmann, DMD,[c] and Markus Balkenhol, DMD[d]
Johannes Gutenberg University, Mainz, Germany; Justus Liebig University, Giessen, Germany; Saarland University, Homburg, Germany

Statement of problem. The storage time and conditions of irreversible hydrocolloid impressions affect their accuracy and in turn the precision of the definitive cast. Recommendations for proper storage are, however, based on theoretical assumptions rather than facts.

Purpose. The purpose of this study was to assess the influence of the 2 most common storage conditions on the dimensional stability of 7 contemporary irreversible hydrocolloids (IH) for a period of up to 7 days.

Material and methods. Twelve specimens per material (Blueprint, Cavex CA37, Cavex ColorChange, Jeltrate, Orthoprint, Cavex Orthotrace, and Tetrachrom) were fabricated according to ISO/CD 21563. The specimens were either stored in a humidor (n=6) or wrapped in a wet tissue (n=6) inside a plastic bag (bag/tissue). The linear dimensional change of the specimens was calculated (Δl [%]) at baseline and after a storage time of 1, 2, 4, 24, 48, 72, 120, and 168 hours. Data were subjected to a repeated measures ANOVA, followed by post hoc comparisons (Tukey HSD Test, Games-Howell Test) at α=.05.

Results. For specimens stored in the humidor, Δl ranged from 0.33% to -2.35% and in the bag/tissue from 2.89% to -2.8%. Storage in the bag/tissue resulted in the most unpredictable results. The color-changing IH showed a pronounced expansion when stored in the bag/tissue.

Conclusions. If humidor storage is used, IH impressions should be poured within 4 hours. If bag/tissue storage is used, noncolor-change IH impressions should, preferably, be poured within 2 hours. In general, the color-change IHs studied had higher dimensional change values. For optimum dimensional stability, IH impressions should be poured as soon as possible. (J Prosthet Dent 2012;108:114-122)

Clinical Implications

The influence of storage conditions on the dimensional accuracy of IH impressions is material dependent. Color-changing IHs reacts more sensitive to storage conditions than regular irreversible hydrocolloids. Incorrect storage may result in clinically relevant dimensional inaccuracies.

Irreversible hydrocolloids (IH) are the most frequently used impression materials in dentistry due to their low cost, their ease of handling and mixing, and the minimal need for equipment.[1-6] In most situations, IH impressions are made to obtain diagnostic casts, which do not require high dimensional accuracy.[1,2,5,7-9] However, IHs are also used during treatment procedures for making impressions for definitive casts, which do require high precision. This is particularly true when clasp-retained, partial removable dental prostheses are to be fabricated.[1,6,7,10-12] Thus, for these patients, the success of the treatment procedure is related to the precision of the defini-

[a]Assistant Professor, Department of Orthodontics, University Medical Centre of the Johannes Gutenberg University.
[b]Chairman, Department of Orthodontics, Justus Liebig University.
[c]Chairman, Department of Prosthetic Dentistry, Justus Liebig University.
[d]Senior Researcher, Department of Operative Dentistry, Periodontology and Preventive Dentistry, Saarland University.

tive cast, which in turn depends on the dimensional accuracy of the irreversible hydrocolloid impression.[8,13,14]

A major shortcoming of IH impression materials is that the set impressions undergo considerable dimensional change after removal from the mouth.[10,15] These dimensional changes can be ascribed to the intrinsic material properties of the irreversible hydrocolloid brand and handling in the unset and set state (including tray selection).[1,6-8,16-21] A knowledge of the oligomer base structure of IHs is indispensable for the understanding of these phenomena.

The powder of IHs primarily consists of sodium, potassium, or ammonium alginates, calcium sulfate, filler particles, and sodium phosphate.[22] The alginate, in combination with the calcium sulfate, is the active component responsible for network formation. Alginates are a family of unbranched polysaccharides consisting of high molecular-weight 1→4, linked block copolymers (20-320 kDa) of anhydro-β-d-mannuronic acid and anhydro-β-d-guluronic acid.[22-25] The mannuronan (M) regions are stretched and flat and are flexible, whereas the guluron (G) blocks are less flexible. Thus, the rigidity and flexibility of the set polymer strongly depends on the G:M ratio.[23,26]

The conversion from the unset sol to the set gel state after adding water is accomplished when calcium ions are released from dissolved calcium sulfate dihydrate or hemihydrate, producing cross-linking points.[5,23,24] The 3-dimensional structure obtained is described as the "egg-box" model with alternating MG sequences surrounding blisters of entrapped water.[5,27] The reaction is affected by the concentration of other compounds such as calcium sulfate dihydrate and MgO.[5] Sodium phosphate is added to these products as a retarder to postpone gelation and thus lengthen the working time. [9,23]

After the powder is mixed with water, polymerization occurs associated with a drop in pH, reflecting the course of the cross-linking reaction.[28-30] Some manufactures add pH dependent dyes to allow the course of polymerization to be followed visually so as to identify the correct time for the removal of the impression.[4,5,9,23,29,30] Common pH dependent dyes are phenolphthalein and thymolphthalein.[31,32] Additional ingredients such as crystalline calcium sulfate are reportedly required to make the pH dependent dyes work properly.[32]

In addition to the nature of the composition of the IH, storage conditions and storage time until pouring are important parameters which affect the dimensions of the impression.[1,10,33] When poured immediately after removal from the patient's mouth, accurate casts can be obtained.[1,3,10,14,19,34] However, the dimensional accuracy of irreversible hydrocolloid impressions is compromised when they are not stored appropriately. Consequently, the precision of the definitive cast is affected, which can result in poorly fitting restorations.[10,35]

Storage in air results in the shrinkage of IH impressions due to evaporation of water. In contrast, storage in water causes swelling and distortion due to imbibition.[1] Finally, storage at 100% relative humidity (RH) reportedly results in minor dimensional changes, although noticeable shrinkage due to syneresis can also be observed.[23,27,34,36]

Although pouring set impressions as quickly as possible is generally recommended,[1,2,4,8] manufacturers claim that contemporary irreversible hydrocolloid impressions are dimensionally stable for up to several days.[4,6,16,37] Nevertheless, scientific evidence is lacking. In addition, recommendations for proper storage are inconsistent. The 2 most common regimes used in daily practice are storing IH impressions under a damp napkin or wrapped in a wet tissue and storage in a humidor.[1,8-10,22,38]

Some previous studies did test the dimensional stability of irreversible hydrocolloids under various storage conditions and for different storage times after impression making.[10,15] However, the authors were not able to identify studies comparing the 2 most common storage regimes mentioned.[23]

Thus, the purpose of this study was to assess the influence of 2 different storage conditions at different time intervals after setting on the dimensional stability of 7 contemporary IHs. The following null hypothesis was tested: the dimensional accuracy of set irreversible hydrocolloid impressions at various time intervals after setting is independent 1) of the storage condition and 2) of the material used.

MATERIAL AND METHODS

All impression materials tested (Table I) were used according to their respective manufacturers' instructions in ambient laboratory conditions (23 ±1°C, 50 ±10% RH). The composition of the materials tested is listed in Table II. As inorganic filler content reportedly affects the dimensional accuracy, the ash content of the products was determined.[6]

Twelve specimens per material were fabricated in a stainless-steel mold according to ISO/CD 21563 and assigned to the 2 storage conditions (Fig. 1). A sample size of 6 per subgroup was chosen since preliminary tests had demonstrated that this sample size yielded an adequate power (.80) to detect statistically and clinically relevant significant differences.

Before specimen preparation, the test block was coated with a thin layer of insulating spray (Kontaflon 85; CRC Industries, Iffezheim, Germany) and placed in an incubator for at least 15 minutes (type TK/L 4250; Ehret, Emmendingen, Germany) to allow the mold to adapt to 35°C.[39]

The dispensing and the mixing of powder and liquid (Fluka, deionized water, Lot 1203160 42505188; Sigma-Aldrich Co, St Louis, Mo) was performed by 1 trained investigator, who followed a standardized protocol. The mixed IH was filled into the mold, covered with a polyethylene

Table I. Irreversible hydrocolloid impression materials under investigation

Material	Manufacturer	Lot No.	Working time* (min/s)	Setting time* (min/s)
Blueprint Cremix	Dentsply DeTrey Konstanz, Germany	0507000176	1'30''	2'10''
Cavex CA37 Fast Set	Cavex Holland BV Haarlem, the Netherlands	050615	1'30''	2'30''
Cavex ColorChange# Fast Set	Cavex Holland BV Haarlem, the Netherlands	041114	1'30''	2'30''
Cavex Orthotrace	Cavex Holland BV Haarlem, the Netherlands	050408	1'10''	2'10''
Jeltrate Fast Set	Dentsply Caulk, Dentsply International Inc, Milford, Del	050401	1'30''	2'30''
Orthoprint	Zhermack Spa Badia Polesine, Italy	32869	1'05''	1'50''
Tetrachrom#	Kaniedenta, Dentalmedizinische Erzeugnisse GmbH & Co KG, Herford, Germany	0155330153	1'45''	2'45''

*Manufacturers' information. #Color-changing irreversible hydrocolloids.

Table II. Composition of irreversible hydrocolloid impression materials tested. Information provided by manufacturers

Material	Filler Type/ Content w/w	Irreversible Hydrocolloid Type/Content w/w	Miscellaneous Ingredients
Blueprint Cremix	crystalline silica (cristobalite) & crystalline silica (quartz) < 55% diatomaceous earth < 20%	potassium irreversible hydrocolloid 10%-15%	calcium sulfate dihydrate, polypropylene glycol, disodium orthophosphate, potassium hexafluorotitanate, sodium alumosilicate, magnesium oxide, pigments, peppermint oil
Cavex CA37 Fast Set	diatomaceous earth 70%	potassium irreversible hydrocolloid 8% sodium irreversible hydrocolloid 6%	pigments, calcium sulfate, potassium hexafluorotitanate, tetrasodium pyrophosphate
Cavex ColorChange# Fast Set	diatomaceous earth 70%	sodium irreversible hydrocolloid 14%	pigments, calcium sulfate, potassium hexafluorotitanate, tetrasodium pyrophosphate, color indicators
Cavex Orthotrace	diatomaceous earth 70%	potassium irreversible hydrocolloid 8% sodium irreversible hydrocolloid 6%	pigments, calcium sulfate, potassium hexafluorotitanate, tetrasodium pyrophosphate
Jeltrate Fast Set	crystalline silica (cristobalite) & crystalline silica (quartz) < 55% diatomaceous earth < 20%	potassium irreversible hydrocolloid < 15% sodium irreversible	calcium sulfate, tetrasodium pyrophosphate, magnesium oxide
Orthoprint	diatomaceous earth 60-70%	hydrocolloid 10%-20%	potassium fluorotitanate
Tetrachrom#	diatomaceous earth < 70%	sodium irreversible hydrocolloid 10%-20%	sodium phosphate, calcium phosphate, magnesium oxide, magnesium carbonate, thymolphthalein, phenolphthalein

#Color-changing irreversible hydrocolloids.

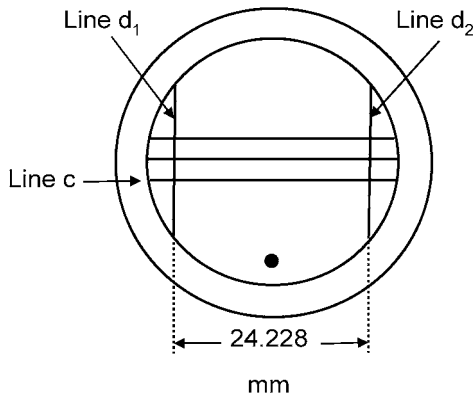

1 Schematic top view of lined test-block according to ISO CD 21563.[39] Distance between lines d_2 and d_1, measured along line c.

2 Storage conditions used: A) Placed on pane of clear acrylic resin on top of wet sponge inside air-tight humidor. One specimen per humidor. B) Wrapped in wet tissues in contact with entire specimen surface and placed in zipper plastic storage bag.

strip (Hostaphan; Pütz GmbH & Co Folien KG, Taunusstein, Germany) and a glass slide, and then placed into a water bath at 35°C (±1°C) 20 seconds before the end of working time under a load of 9.8 N.[39] The mold was removed from the water bath 3 minutes after setting.[1] Excess moisture was removed by gentle air drying to simulate the clinical situation. Thereafter, the specimen was placed on the XY-stage of a traveling microscope (M420; Leica, Bensheim, Germany), equipped with a digital micrometer screw (type 164-161; Mitutoyo Corp, Kawasaki, Japan), which had an accuracy of ±3 µm, to determine the distance between the 2 vertical d-lines of the mold 3 times (Fig. 1).[38] Before testing, the mean distance of the 2 vertical d-lines engraved on the bottom of the stainless steel mold (measuring point: inner borders of the d-lines at the crossing with the horizontal c-line) was determined from 20 measurements as reference (l_1 = 24.23 mm ±0.002 mm).

Immediately after measurement, the specimens were either stored in a humidor (1 specimen per humidor) or wrapped in a water-saturated tissue and placed inside a resealable zipper plastic storage bag (Toppits; Melitta GmbH & Co KG, Minden, Germany) (bag/tissue) in ambient conditions for 1, 2, 4, 24, 48, 72, 120, and 168 hours (Fig. 2). The relative linear dimensional change (Δl [%]) was calculated according to the ISO standard.[39]

To evaluate the inorganic filler content (FC [%]), 1 g (±0.01 g) of the irreversible hydrocolloid powder (n = 3 per material) was weighed and dispensed into a ceramic crucible (Heraeus Kulzer, Hanau, Germany). The crucible was then placed in a laboratory furnace (type KM-N; MIHM-Vogt GmbH & Co KG, Karlsruhe, Germany). The ashing time was 1 hour at a temperature of 600°C. The percentage of the residual solid material (inorganic filler content) was calculated (by mass) as described previously.[40]

All Δl data was subjected to repeated measures analysis of variance (ANOVA) to evaluate the influence of material and storage condition on the course of dimensional changes (between-subject effects). A Greenhouse-Geisser correction was applied to determine the influence of the within-subject effects because the Mauchly test had revealed a lack of sphericity.

To evaluate the effect of the material at a specific storage time, parametrical test procedures were used (Tukey Honestly Significant Difference (HSD) test in the case of homogeneity of variances or Games-Howell test where no variance homogeneity existed).[41] Finally, the data of the individual storage times were subjected to a *t* test for unpaired sample groups (2-tailed) to test the influence of stor-

age condition for each material. Material dependent differences regarding the inorganic filler content were evaluated with the Tukey Honestly Significant Difference (HSD) test. The significance level was set to α=.05 for all tests. All statistical analyses were performed with statistical software (SPSS 15.01; SPSS Inc, Chicago, Ill).

RESULTS

All IHs showed high dimensional accuracy at baseline (Tables III and IV). The dimensional accuracy decreased for stored specimens. The variation of Δl was smaller for humidor storage (0.32% to -2.35%) than for bag/tissue storage (2.89% to -2.81%). When stored in the humidor (Table III), the lowest Δl values were observed for the 2 color-changing IHs (Tetrachrom and Cavex ColorChange) at each storage time. There were no significant differences between these 2 materials at any storage period. The highest dimensional changes after 5 and 7 days storage, respectively, were observed for Jeltrate, Blueprint, and Orthoprint. Under bag/tissue conditions (Table IV), the 2 color-changing irreversible hydrocolloids showed a linear expansion up to 2.9%. The Δl values for both products differed significantly (P<.05) at storage times longer than 2 hours. In contrast, all other products showed ongoing shrinkage with increasing storage times. After 7 days storage, Cavex CA37 and Cavex Orthotrace showed significantly lower Δl values (P<.05) than all regular irreversible hydrocolloids tested except Orthoprint (P>.05).

The repeated measures ANOVA revealed a significant influence of the storage condition and material (P<.001) on the dimensional changes over time. In addition, an interaction between the material and its storage condition was observed (P<.001)

TABLE III. Mean values (standard deviations) of Δl [%] for humidor storage at various points in time (in hours)

Material	0#	1#	2*	4#	24*	48#	72#	120*	168*
Blueprint cremix	0.27 (±0.32)	-0.44 (±0.36)	-0.80 (±0.34)	-1.07 (±0.39)	-1.53 (±0.32)	-1.89 (±0.34)	-2.24 (±0.34)	-2.24 (±0.35)	-2.19 (±0.27)
	c	a b	a b	a	a b c	a	a	a d	a c d
Cavex CA37	-0.14 (±0.17)	-0.51 (±0.09)	-0.76 (±0.1)	-1.06 (±0.13)	-1.50 (±0.13)	-1.71 (±0.11)	-1.91 (±0.18)	-1.98 (±0.12)	-1.88 (±0.12)
	a	a	a	a	a	a b	a b c	a	b d e
Cavex ColorChange	0.32 (±0.01)	-0.05 (±0.33)	-0.51 (±0.27)	-0.90 (±0.18)	-1.07 (±0.19)	-1.35 (±0.3)	-1.50 (±0.45)	-1.49 (±0.53)	-1.55 (±0.57)
	c	b c	a b	a b	c	b c	c d	a b c	a b c
Cavex Orthotrace	0.12 (± 0.1)	-0.47 (±0.16)	-0.76 (±0.13)	-1.07 (±0.17)	-1.35 (±0.04)	-1.50 (±0.05)	-1.58 (±0.09)	-1.57 (±0.06)	-1.76 (±0.06)
	a b c	a	a	a	a b c	a b c	b c d	b	b d
Jeltrate	-0.12 (±0.07)	-0.44 (±0.11)	-0.75 (±0.16)	-1.12 (±0.1)	-1.56 (±0.18)	-1.74 (±0.2)	-1.93 (±0.15)	-2.01 (±0.13)	-2.28 (±0.19)
	a	a b	a	a	a	a	a b c	a	a c
Orthoprint	-0.07 (±0.07)	-0.40 (±0.17)	-0.72 (±0.17)	-1.10 (±0.08)	-1.43 (±0.1)	-1.79 (±0.05)	-2.02 (±0.08)	-2.35 (±0.13)	-2.21 (±0.2)
	a b	a b	a	a	a b	a	a b	c d	a c e
Tetrachrom	0.18 (±0.15)	0.04 (±0.21)	-0.36 (±0.13)	-0.67 (±0.21)	-1.03 (±0.24)	-1.23 (±0.23)	-1.43 (±0.2)	-1.48 (±0.24)	-1.55 (±0.23)
	b c	c	b	b	b c	c	d	b	b

Same lower case letters related to columns (differences between materials tested at various storage times) denote results which do not differ significantly (P>.05). *Games-Howell test. #Tukey HSD test.

TABLE IV. Mean values (standard deviations) of Δl [%] for bag/tissue storage at various points in time (in hours)

Material	0#	1#	2*	4#	24*	48#	72#	120*	168*
Blueprint cremix	0.02 (±0.23)	0.61 (±0.25)	0.20 (±0.22)	-0.40 (±0.08)	-1.38 (±0.17)	-1.74 (±0.29)	-2.00 (±0.25)	-2.21 (±0.22)	-2.30 (±0.21)
	a b	b	c	c	a f	b	b	a f	a
Cavex CA37	-0.11 (±0.1)	0.15 (±0.13)	-0.26 (±0.11)	-0.80 (±0.08)	-1.46 (±0.25)	-1.77 (±0.28)	-1.86 (±0.29)	-1.87 (±0.19)	-1.82 (±0.15)
	a	a	a	b	b f	b	b	b f	c
Cavex ColorChange	0.05 (±0.26)	1.47 (±0.09)	2.09 (±0.21)	2.46 (±0.36)	2.64 (±0.34)	2.89 (±0.35)	2.88 (±0.32)	2.75 (±0.25)	2.78 (±0.21)
	a b	c	b	e	c	d	d	c	d
Cavex Orthotrace	-0.22 (±0.14)	-0.09 (±0.16)	-0.42 (±0.13)	-0.86 (±0.07)	-1.68 (±0.2)	-2.32 (±0.16)	-2.47 (±0.18)	-2.05 (±0.17)	-1.80 (±0.2)
	a	a	a	b	f	a b	a	f	c
Jeltrate	-0.16 (±0.15)	0.05 (±0.17)	-0.55 (±0.17)	-1.27 (±0.29)	-2.20 (±0.22)	-2.61 (±0.22)	-2.80 (±0.22)	-2.81 (±0.23)	-2.67 (±0.18)
	a	a	a	a	d	a	a	d	a
Orthoprint	-0.15 (±0.13)	-0.06 (±0.14)	-0.48 (±0.22)	-0.78 (±0.14)	-1.5 (±0.22)	-1.77 (±0.29)	-1.91 (±0.3)	-2.14 (±0.37)	-2.14 (±0.3)
	a	a	a	b c	e f	b	b	e f	a c
Tetrachrom	0.16 (±0.13)	1.65 (±0.5)	1.95 (±0.27)	1.92 (±0.31)	1.44 (±0.5)	1.42 (±0.74)	1.11 (±0.75)	0.69 (±0.87)	0.16 (±0.76)
	b	c	b	d	g	c	c	g	b

Same letters related to columns (differences between materials tested at various storage times) denote results which do not differ significantly (P>.05). *Games-Howell test. #Tukey HSD test.

Table V. Results of ANOVA for repeated measures (tests of between-subject effects)

Source	Type III Sum of Squares	*df*	Mean Square	F	*P*
Corrected model	472	1	472	1264	<.001
Material	459	6	77	205	<.001
Storage	105	1	105	280	<.001
Material × storage	276	6	46	123	<.001
Error	26	70	0.37		

Table VI. Results of ANOVA* for repeated measures (tests of within-subject effects)

Source	Type III Sum of Squares	*df*	Mean Square	F	*P*
Time	299	2.5	119	1129	<.001
Time × storage	20	2.5	8	77	<.001
Time × material	93	15	6	58	<.001
Time × storage × material	76	15	5	48	<.001
Error	18	176	0.11		

*Greenhouse-Geisser test.

Table VII. Pairwise comparison (*P*-values) using *t* test for unpaired samples (influence of storage at various points in time (in hours))

Material	0	1	2	4	24	48	72	120	168
Blueprint cremix	.144	<.001*	<.001*	.007*	.320	.457	.184	.860	.451
Cavex CA37	.709	<.001*	<.001*	.002*	.725	.642	.694	.283	.436
Cavex ColorChange	.048*	<.001*	<.001*	<.001*	<.001*	<.001*	<.001*	<.001*	<.001*
Cavex Orthotrace	.001*	.003*	.001*	.027*	.008*	<.001*	<.001*	<.001*	.682
Jeltrate	.584	<.001*	.064	.279	<.001*	<.001*	<.001*	<.001*	.004*
Orthoprint	.260	.003*	.059	.001*	.450	.862	.444	.211	.619
Tetrachrom	.816	<.001*	<.001*	<.001*	<.001*	<.001*	<.001*	<.001*	<.001*

*significant influence of storage.

Table VIII. Inorganic filler content determined from ashing of powder (mean values and standard deviations)

Product	Filler Content
Blueprint cremix	83.0 (±0.2)[a]
Cavex CA37	83.3 (±0.1)[a,b]
Cavex ColorChange	84.5 (±0.2)[c]
Jeltrate	86.1 (±0.3)[d]
Orthoprint	85.4 (±0.2)[e]
Cavex Orthotrace	83.6 (±0.1)[b]
Tetrachrom	88.2 (±0.1)[f]

#Tukey HSD test. Identical lower case superscript letters denote materials, which do not differ significantly (*P*>.05).

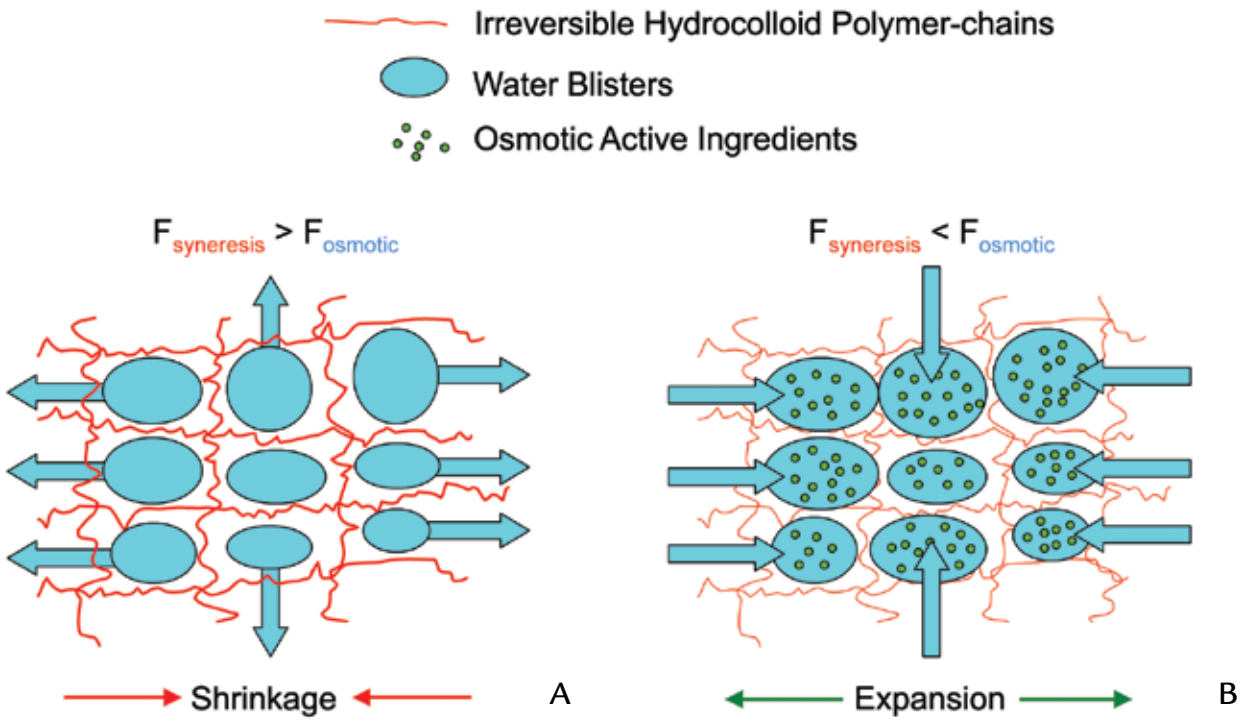

3 Schematic drawing illustrating presumed processes within irreversible hydrocolloid on molecular level. A, Shrinkage phenomena occur if synersis forces ($F_{syneresis}$) are higher than osmotic forces ($F_{osmotic}$). B, Osmotic active ingredients within color-changing irreversible hydrocolloid shift force balance towards $F_{osmotic}$, resulting in overall expansion of material.

(Table V). The Greenhouse-Geisser test revealed a significant influence of the time alone and in interaction with material and storage condition ($P<.001$) (Table VI).

The *t* test for unpaired sample groups revealed a significant influence of the storage condition at various storage times, mainly for the 2 color-changing IHs ($P<.001$) (Table VII). Most of the materials tested differed significantly regarding filler-content ($P<.05$); Tetrachrom showed the highest fraction of inorganic filler (Table VIII).

DISCUSSION

Some prosthodontic treatment procedures require accurate IH impressions to obtain accurate definitive casts.[8,12-14] Major factors influencing the accuracy of IHs are storage time and condition. This study, therefore, aimed at investigating the influence of these factors on the dimensional accuracy of set IH impressions.[1,10,16] The results indicate that the null hypotheses must be rejected because the dimensional accuracy of IH impressions at various time intervals after setting was affected by the storage condition and the material used.

Specimen preparation, setting conditions, and measurement complied with ISO/CD 21563.[39] All tests were performed by 1 experienced investigator, following a comprehensive training period to standardize dosing, mixing procedures, and the fabrication of specimens.

As storage conditions, the 2 major storage regimes used in clinical practice were selected.[23] Storing IHs in ambient conditions reportedly results in shrinkage and in turn in clinically unacceptable dimensional changes.[3,6,14,16] Thus, this condition was omitted.

The lowest dimensional changes were observed for specimens stored in a humidor. Significant differences observed between some of the products were small and therefore of minor clinical importance. Douglas et al[10] found acceptable dimensional stability of IH impressions stored for 72 hours at 100% RH. The results for Cavex CA37 in the current study compared well with the data after 1 hour storage presented by Miller.[34] However, an increased shrinkage after 24 hours storage versus Miller's results was noted. Shrinkage values obtained by Chen et al[33] exceed the results of the current study for Δl (Cavex CA37, Jeltrate), especially at 24-hour storage. The differences might be related to the storage conditions used because Chen et al did not use an individual humidor for every single specimen. Dahl et al[36] stated that IH impressions might be stored for 24 hours at 100% RH without compromising the dimensional accuracy of most products.

The results of the current study clearly indicate that shrinkage due to syneresis occurs even at 100% RH. Syneresis is regarded as a combined result of the rearrangement of polymer chains and the continuing polymerization and formation of hydrogen bonds between polymer chains. As a consequence, the skeletal network of the gel contracts and forces intermicellar fluid outwards, resulting in an exudation of liquid.[6,25,34]

In addition, the polymer:filler ratio is a factor influencing the shrinkage.[6] The values obtained for the content of solid materials by ashing was higher than those provided by the respective manufacturer (Table II). It is believed that manufacturers use additional solid components, such as inorganic pigments, which increase the number of ingredients, contributing to the dimensional stability. In the current study, however, the content of inorganic filler had no influence on dimensional stability. Therefore, it is postulated that the polymer configuration is of importance regarding the phenomenon of syneresis related shrinkage for the materials tested.

An important question is the one of maximum acceptable dimensional change. Most studies identify the first point in time at which a significant dimensional change of the impression occurs when compared to the control. This criterion is, however, of limited importance because significant differences may not be clinically relevant and vice versa. An important shortcoming is that the literature lacks important information about the threshold at which the dimensional accuracy becomes clinically unacceptable. Values given range from 0.1% to 0.8%.[14,20,35,36]

Unless impressions are poured in their office, dentists will be able to control neither the time between impression making and pouring nor the storage condition used in the dental laboratory. Therefore, the reproducibility of the linear dimensional change (the scattering of Δl-values) should be considered. A high scattering of Δl-values at different storage times and under different conditions counteracts standardized impression making and pouring procedures and in turn leads to unpredictable results.

When stored in the bag/tissue, the results of Δl were markedly different from humidor storage for the 2 color-changing IHs. The highest variations and broadest scattering of Δl values were observed for Tetrachrom. Both color-changing IHs seem to exhibit a higher water uptake associated with swelling when compared to the regular IHs tested. It is unclear why this occurs. It is reported that IHs swell and expand if the impression comes in direct contact with water because of imbibition.[1,19] The driving force and resulting dimensional change of an irreversible hydrocolloid-gel is dependent upon the equilibration between the network chain elasticity and the osmotic pressure difference between the gel and the outer solution.[18] These phenomena are particularly important when IH impressions are to be disinfected.[17,18] However, as observed in the current study, syneresis may counteract swelling. In consequence, all regular IHs showed a distinct shrinkage under bag/tissue conditions.

In contrast, the storage condition had an important effect on the 2 color-changing IHs. The following 2 hypotheses may explain the results: additional ingredients, typically used in color-changing IHs versus regular IHs, may exhibit a high hygroscopic potential. Such ingredients are dissolved or dispersed in the water blisters within the polymer chains, increasing the osmotic pressure inside the material. When the impression comes in contact with water, fluid will be drawn inside the blisters from outside by diffusion. The diffusion will persist until the force balance is reached between the network chain elasticity and osmotic pressure. This process will result in an overall expansion of the impression, depending on the amount of osmotic effective ingredients (Fig. 3). Such an osmotic effective ingredient is crystalline sodium sulfate, which reportedly is mandatory to obtain the desired color change effects in color-changing IHs.[32]

Consequently, a high osmotic pressure in a set IH, even when stored in a humidor, may counteract and reduce syneresis. The lower shrinkage of Tetrachrom and Cavex Colorchange at various storage times in the humidor supports this hypothesis. A similar tendency was observed by Miller et al[34] for a color-changing irreversible hydrocolloid (Kromopan). Given that the force balance between osmotic and syneresis forces is the key to the storage related dimensional changes of an irreversible hydrocolloid, manufacturers may be able to develop improved "nonshrinking" irreversible hydrocolloids simply by fine tuning these parameters with osmotic effective ingredients.

In summary, the Δl values of specimens stored in the bag/tissue environment revealed a broader scattering and a higher deviation from the definitive impression than storage in a humidor, which is undesirable. In contrast, storing specimens in a humidor resulted in a smaller scattering of Δl values and in turn to more predictable results.

It should be mentioned that most dental clinics do not have single humidors for storing impressions. However, humidor conditions can easily be achieved in daily practice by using airtight plastic boxes containing a wet sponge which does not contact the impression. In addition, it is hypothesized that the same environmental conditions can be achieved by storage in airtight plastic bags (eventually, with wet cotton rolls which are not in direct contact with the impression). This question should be addressed in further studies.

The limitation of this study is that dimensional changes of IH impressions are more complex than those of the flat specimens prepared for the current study. In addition, the water content of a wet tissue could hardly be controlled in daily practice and may vary at different places on the same impression. In turn, different phenomena may occur within an impression leading to distortion.

CONCLUSIONS

Within the limitations of the study the following conclusions can be drawn:

1. If humidor storage is used, IH impressions should be poured within 4 hours.

2. If bag/tissue storage is used, most noncolor change IH impressions should be poured within 2 hours (except Blueprint cremix which had higher mean dimensional change values).

3. For optimum dimensional stability, IH impressions should be poured as soon as possible, because in general, mean values increase with time.

4. In general, the color-change IH materials studied had higher dimensional change values.

REFERENCES

1. Anusavice KJ. Phillips' science of dental materials. 11th ed. St. Louis: Saunders; 2003. p. 205-254.
2. Rosenstiel SF, Land MF, Fujimoto J. Contemporary fixed prosthodontics. 4th ed. St. Louis: Mosby Inc.; 2006. p. 35-48.
3. Coleman RM, Hembree JH, Jr, Weber FN. Dimensional stability of irreversible hydrocolloid impression material. Am J Orthod 1979;75:438-46.
4. Doubleday B. Impression materials. Br J Orthod 1998;25:133-40.
5. Cook W. Alginate dental impression materials: chemistry, structure, and properties. J Biomed Mater Res 1986;20:1-24.
6. Fellows CM, Thomas GA. Determination of bound and unbound water in dental alginate irreversible hydrocolloid by nuclear magnetic resonance spectroscopy. Dent Mater 2009;25:486-93.
7. Rudd KD, Morrow RM, Strunk RR. Accurate alginate impressions. J Prosthet Dent 1969;22:294-300.
8. McCabe JF, Walls AWG. Applied dental materials. 9th ed. Oxford: Blackwell Publishing Ltd; 2008. p. 154-162.
9. Ashley M, McCullagh A, Sweet C. Making a good impression: (a 'how to' paper on dental alginate). Dent Update 2005;32:169-70, 72, 74-5.
10. Douglass JB, White JG, Mitchell RJ. Clinical acceptability of orthodontic retainers fabricated from stored alginate impressions. Am J Orthod Dentofacial Orthop 1990;97:93-7.
11. Walsh JF. Alginate impression materials. Orthodontist 1971;3:65-7.
12. McNamara JA, Howe RP. Clinical management of the acrylic splint Herbst appliance. Am J Orthod Dentofacial Orthop 1988;94:142-9.
13. Peutzfeldt A, Asmussen E. Accuracy of alginate and elastomeric impression materials. Scand J Dent Res 1989;97:375-9.
14. Cohen BI, Pagnillo M, Deutsch AS, Musikant BL. Dimensional accuracy of three different alginate impression materials. J Prosthodont 1995;4:195-9.
15. Gilmore HW, Phillips RW, Swartz ML. The effect of residual stress and water change on the deformation of hydrocolloid impression materials. J Dent Res 1958;37:816-23.
16. Craig RG. Review of dental impression materials. Adv Dent Res 1988;2:51-64.
17. Martin N, Martin MV, Jedynakiewicz NM. The dimensional stability of dental impression materials following immersion in disinfecting solutions. Dent Mater 2007;23:760-8.
18. Saitoh S, Araki Y, Kon R, Katsura H, Taira M. Swelling/deswelling mechanism of calcium alginate gel in aqueous solutions. Dent Mater J 2000;19:396-404.
19. Rubel BS. Impression materials: a comparative review of impression materials most commonly used in restorative dentistry. Dent Clin North Am 2007;51:629-42.
20. Skinner EW, Cooper EN, Beck FE. Reversible and irreversible hydrocolloid impression materials. J Am Dent Assoc 1950;40:196-207.
21. Damodara EK, Litaker MS, Rahemtulla F, McCracken MS. A randomized clinical trial to compare diagnostic casts made using plastic and metal trays. J Prosthet Dent 2010;104:364-71.
22. Van Noort R. Introduction to dental materials. 3rd ed. St. Louis: Mosby Elsevier; 2007. p. 181-204.
23. Powers JM, Sakaguchi RL. Craig's restorative dental materials. 12th ed. St. Louis: Mosby Elsevier; 2006. p. 272-278.
24. Draget KI, Stokke BT, Yuguchi Y, Urakawa H, Kajiwara K. Small-angle x-ray scattering and rheological characterization of alginate gels. 3. Alginic acid gels. Biomacromolecules 2003;4:1661-8.
25. Draget KI, Gaserod O, Aune I, Andersen PO, Storbakken B, Stokke BT, et al. Effects of molecular weight and elastic segment flexibility on syneresis in Ca-alginate gels. Food Hydrocoll 2001;15:485-90.
26. Draget KI, Østgaard K, Smidsrød O. Homogeneous alginate gels: A technical approach. Carbohydr Polymers 1990;14:159-78.
27. Morris ER, Rees DA, Thom D. Chiroptical and stoichiometric evidence of a specific, primary dimerisation process in alginate gelation. Carbohydr Res 1978;66:145-54.
28. Moergeli JR, Jr., Vermilyea SG. Changes in pH of irreversible hydrocolloid impression materials during setting. J Prosthet Dent 1986;56:342-3.
29. Anastassiadou V, Dolopoulou V, Kaloyannides A. The relation between thermal and pH changes in alginate impression materials. Dent Mater 1995;11:182-5.
30. Anastassiadou V, Dolopoulou V, Kaloyannides A. Relationship between pH changes and dimensional stability in irreversible hydrocolloid impression material during setting. Int J Prosthodont 1995;8:535-40.
31. Kamohara H, Watanabe N, Takeo M, Naito H. Dental alginate impression material composition. US patent 6559200. May 6, 2003.
32. Timmerman G, Ippel D. Composition for dental impression material. European patent EP 1243246B1. September 25, 2002.
33. Chen SY, Liang WM, Chen FN. Factors affecting the accuracy of elastometric impression materials. J Dent 2004;32:603-9.
34. Miller MW. Syneresis in alginate impression materials. Br Dent J 1975;139:425-30.
35. Balkenhol M, Ferger P, Wöstmann B. Dimensional accuracy of 2-stage putty-wash impressions: influence of impression trays and viscosity. Int J Prosthodont 2007;20:573-5.
36. Dahl BL, Dymbe B, Valderhaug J. Bonding properties and dimensional stability of hydrocolloid impression systems in fixed prosthodontics. J Prosthet Dent 1985;53:796-800.
37. Eriksson A, Ockert-Eriksson G, Lockowandt P. Accuracy of irreversible hydrocolloids (alginates) for fixed prosthodontics. A comparison between irreversible hydrocolloid, reversible hydrocolloid, and addition silicone for use in the syringe-tray technique. Eur J Oral Sci 1998;106:651-60.
38. Patel RD, Kattadiyil MT, Goodacre CJ, Winer MS. An in vitro investigation into the physical properties of irreversible hydrocolloid alternatives. J Prosthet Dent 2010;104:325-32.
39. International Standardization Organization. Specification No. ISO/CD 21563. Hydrocolloid impression materials. 1st ed. 2008. Available at: http://www.iso.org/iso/store.htm.
40. Balkenhol M, Knapp M, Ferger P, Heun U, Wöstmann B. Correlation between polymerization shrinkage and marginal fit of temporary crowns. Dent Mater 2008;24:1575-84.
41. Salkind NJ. Statistics for people who (think they) hate statistics. 2 ed. Thousand Oaks: Sage Publications; 2004. p. 212-227.

Corresponding author:
Dr Markus Balkenhol
Department of Operative Dentistry
Periodontology and Preventive Dentistry
Saarland University Hospital
Building 73
D-66421 Homburg Saar
GERMANY
Fax: +49-6841-16-24954
E-mail: markus.balkenhol@uks.eu

Acknowledgments
The authors thank Dr. Jürgen Riehl for assistance with the statistical analysis.